PYRANOMETERS | SPECIFICATION SHEET

MS-80S Pyranometer

Class A, Spectrally Flat & Fast Response

5 Years Standard Warranty | ISO.17025 Calibration | Class A ISO.9060:2018 Compliant

ISO 9060:2018 Overview

The performance characteristics of Class A, B, and C sensors established by the International Standards Authority in '**ISO 9060:2018**' are the primary method of comparing different sensor classes and offer a helpful baseline when comparing sensors from different vendors.

ISO 9060:2018 was introduced in 2018, with major changes from the previous classification standard launched in 1990. The new class definitions and criteria were designed to be more consistent and compliant with available sensors, offering a clear overview of classes and specifications to help define selection criteria and support product comparison.

With many products, including the MS-80 Class A pyranometer launched in 2016, EKO led the way, implementing design and performance changes that would influence the 2018 standard and today help us produce the highest quality, most accurate, and reliable sensors in every class.



ISO Specifications

ISO 9060:2018 Parameters	CLASS A	MS-80S
Response time 95%	<10s	<0.5s
Zero offset A - Thermal Radiation (200W/m²)	± 7W/m²	± 1W/m²
Zero offset B - Temperature change (5K/hr)	± 2W/m²	± 1W/m²
Zero offset C - Complete zero off-set	± 10W/m²	± 2W/m²
Non-stability (change/year)	± 0.8%	< 0.5%/5 years
Non-linearity (100 to 1000W/m²)	± 0.5%	± 0.2%
Directional Response (at 1000W/m² | 0 to 80°)	± 10W/m²	± 10W/m²
Spectral Error (Spectral selectivity ± 3%)	± 0.5%	± 0.2%
Temperature dependency (-20°C to 50°C)	± 1%	± 0.5%
Tilt Response (0-90° | 1000W/m²)	± 0.5%	± 0.2%
Additional Signal Processing error	± 2W/m²	< 1 W/m²

Technical Features

Wavelength Range (nm)	285 to 3000
Irradiance range (W/m²)	0 to 4000
Nominal Sensitivity (µV/W/m²)	N/A
Signal Output	Modbus 485 RTU / SDI-12 4-20mA / 0-10mA / 0-1V*
Sensor Diagnostic	Relative Humidity ± 2% Temp. ± 0.1% / Tilt Angle ± 1°
Nominal Impedance	N/A
Operating temperature	-40 to 80°C
Supply voltage	5 - 30 VDC
Power Consumption	< 0.2 W
Ingress Protection	IP 67
Calibration traceability / uncertainty	ISO 17025 / WRR / < 0.7% (k = 1.96)
Standard Cable Length	10m (Optional lengths 20m, 30m, 50m)

*Configurable with external 100Ω precision shunt resistor

Technical Diagram

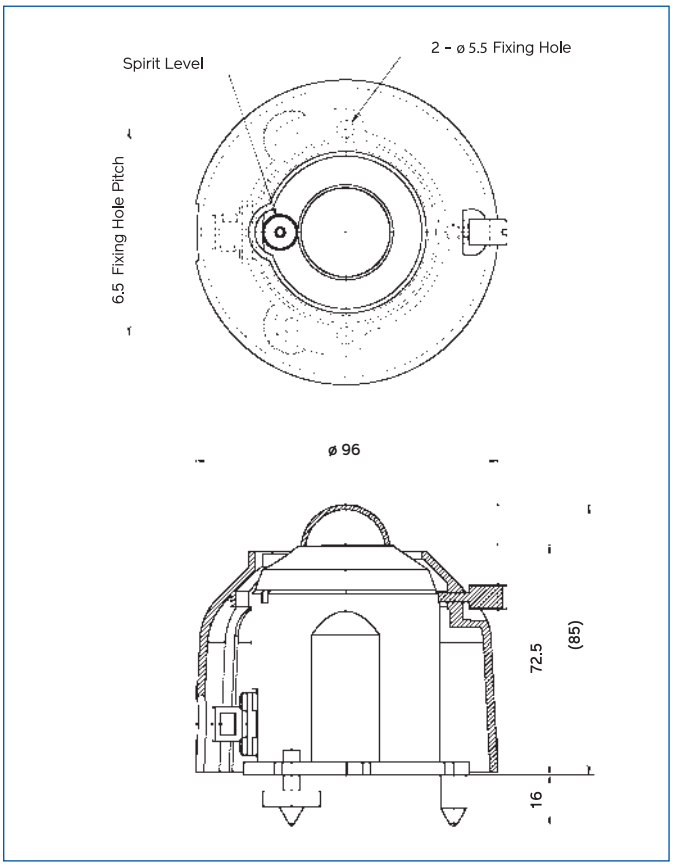

ISO/IEC 17025 Calibration

The EKO calibration laboratory in Tokyo is accredited & certified by Perry Johnson Laboratory Accreditation, Inc. (PJLA) to perform pyranometer and pyrheliometer calibrations following the requirements of ISO/IEC 17025.

Our engineers perform the most accurate solar sensor calibrations possible, compliant with the international standards defined under ISO 9847.

ilac-MRA

PJLA
Calibration & Testing

QR

Use the QR code to visit our website, contact our team, or to find out more about the **MS-80S**, other related products, and the full range of Class and industry-leading S-Series pyranometers.

EKO Instruments Co. Ltd
info@eko.co.jp
+81-3-3469-6713

EKO Instruments Europe B.V.
info@eko-eu.com
+31-0-703050117

EKO Instruments USA Inc.
info@eko-usa.com
+1-408-977-7751

EKO Instruments Sales India
info@eko.co.jp
+91 9869047721

EKO Instruments Sales China
info@eko-chn.com
+81-3-3469-6713

eko-instruments.com